MHP11

HYDRAULIC MOTORS

TECHNICAL CATALOG

POCLAIN Hydraulics

HIGH PERFORMANCE

MHP MOTORS

The new MHP hydraulic motors represent the keystone of the High Performance system proposed by Poclain Hydraulics.

Thanks to their innovative design, the MHP motors will offer superior performances (higher speed and power, working pressure of 500 bar) compared to conventional cam-lobe motors. These characteristics make these components suitable for any applications requiring highly performing hydraulic drives, such as agricultural machines, drilling rigs or industrial applications.

But besides their performance, the MHP motors will also allow improvement of the global efficiency of the transmission resulting in lower fuel consumption for the machine, while ensuring higher robustness and reliability, which are required for the most demanding applications.

From 900 cc to 3 500 cc	Up to 520 rpm	Up to 24 kN.m	Up to 280 kW	Up to 500 bar	Up to 4 speeds

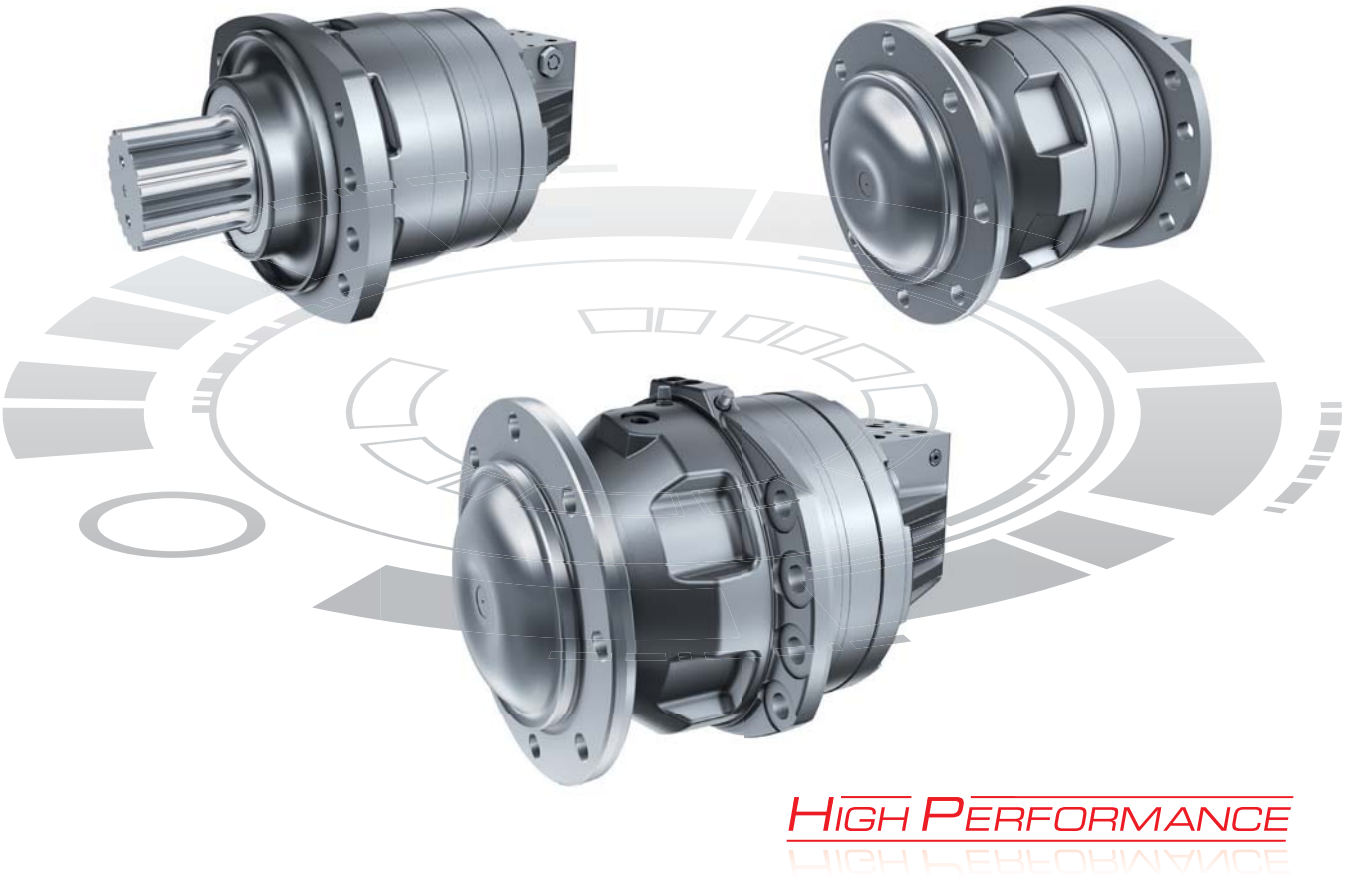

CONTENT

MHP11

		C	8 8 8			9 9 9		
	Max. pressure	bar *[PSI]*	450 *[6 527]*			450 *[6 527]*		
			❶	❷	❸	❶	❷	❸
1C Distribution	**Displacement**	cm³/rev *[in³/rev.]*	933 *[56.9]*			1 050 *[64.1]*		
	Max. speed	rpm	324			291		
	Max. power(1)	kW *[HP]*	95 *[127]*			99 *[133]*		
	Th. torque at 100 bar *[1000 PSI]*	Nm *[Lb.ft]*	1 483 *[754]*			1 670 *[849]*		
2C Distribution (6/2)	**Displacement**	cm³/rev *[in³/rev.]*	933 *[56.9]*	311 *[18.9]*		1 050 *[64.1]*	350 *[21.4]*	
	Max. speed	rpm	289	318		260	286	
	Max. power(1)	kW *[HP]*	98 *[131]*	71 *[95]*		102 *[137]*	72 *[97]*	
	Th. torque at 100 bar *[1000 PSI]*	Nm *[Lb.ft]*	1 483 *[754]*	494 *[251]*		1 670 *[849]*	557 *[283]*	
3C Distribution (6/4/2)	**Displacement**	cm³/rev *[in³/rev.]*	933 *[56.9]*	622 *[37.9]*	311 *[18.9]*	1 050 *[64.1]*	700 *[42.7]*	350 *[21.4]*
	Max. speed	rpm	277	284	293	249	256	263
	Max. power(1)	kW *[HP]*	97 *[130]*	93 *[125]*	65 *[87]*	101 *[135]*	97 *[130]*	66 *[89]*
	Th. torque at 100 bar *[1000 PSI]*	Nm *[Lb.ft]*	1 483 *[754]*	989 *[503]*	494 *[251]*	1 670 *[849]*	1 113 *[566]*	557 *[283]*

❶ **First displacement** ❷ **Second displacement** ❸ **Third displacement**

(1) Max. power obtained at maximum speed.

The maximum motor speed can be impacted by the type of bearing support. For a precise calculation, please consult your Poclain Hydraulics application engineer.

CHARACTERISTICS

		C	0 0 0			1 1 1			2 2 2		
	Max. pressure	bar *[PSI]*	450 *[6 527]*			450 *[6 527]*			450 *[6 527]*		
			❶	❷	❸	❶	❷	❸	❶	❷	❸
1C Distribution	**Displacement**	cm³/rev *[in³/rev.]*	1 167 *[71.2]*			1 284 *[78.4]*			1 401 *[85.5]*		
	Max. speed	rpm	264			241			222		
	Max. power(1)	kW *[HP]*	102 *[137]*			104 *[139]*			104 *[139]*		
	Th. torque at 100 bar *[1000 PSI]*	Nm *[Lb.ft]*	1 856 *[944]*			2 042 *[1 038]*			2 228 *[1 133]*		
2C Distribution (6/2)	**Displacement**	cm³/rev *[in³/rev.]*	1 167 *[71.2]*	389 *[23.7]*		1 284 *[78.4]*	428 *[26.1]*		1 401 *[85.5]*	467 *[28.5]*	
	Max. speed	rpm	236	260		215	238		198	219	
	Max. power(1)	kW *[HP]*	105 *[141]*	72 *[97]*		106 *[142]*	73 *[98]*		106 *[142]*	73 *[98]*	
	Th. torque at 100 bar *[1000 PSI]*	Nm *[Lb.ft]*	1 856 *[944]*	619 *[315]*		2 042 *[1 038]*	681 *[346]*		2 228 *[1 133]*	743 *[378]*	
3C Distribution (6/4/2)	**Displacement**	cm³/rev *[in³/rev.]*	1 167 *[71.2]*	778 *[47.5]*	389 *[23.7]*	1 284 *[78.4]*	856 *[52.2]*	428 *[26.1]*	1 401 *[85.5]*	934 *[56.9]*	467 *[28.5]*
	Max. speed	rpm	226	232	239	207	212	219	190	195	202
	Max. power(1)	kW *[HP]*	104 *[139]*	100 *[134]*	67 *[89]*	105 *[141]*	100 *[134]*	67 *[89]*	105 *[141]*	100 *[134]*	68 *[91]*
	Th. torque at 100 bar *[1000 PSI]*	Nm *[Lb.ft]*	1 856 *[944]*	1 237 *[629]*	619 *[315]*	2 042 *[1 038]*	1 361 *[692]*	681 *[346]*	2 228 *[1 133]*	1 485 *[755]*	743 *[378]*

❶ **First displacement** ❷ **Second displacement** ❸ **Third displacement**

(1) Max. power obtained at maximum speed.

Overall efficiency

Average values given for guidance for code 0 displacement after 100 hours of operation with HV46 hydraulic fluid at 50°C *[122°F]*.

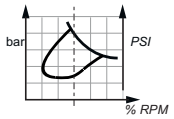

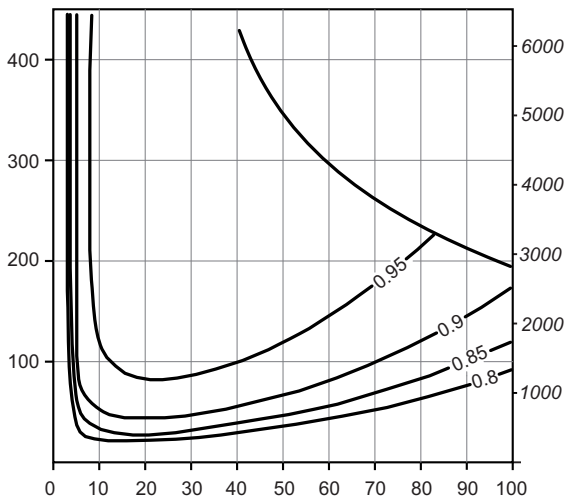

The starting torque is taken to be approximately 85% of the first value for available pressure. For a precise calculation, consult your Poclain Hydraulics application egineer.

MODEL

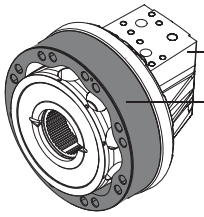

Valving System

Torque Module

					C			D			V
					1	2	3	1	2	3	1
C	M	H	P	1	1						

C1-C3

				Displacement cm³/tr *[cu.in/rev.]*
	8	8	8	933 *[56.9]*
	9	9	9	1 050 *[64.1]*
MHP11	0	0	0	1 167 *[71.2]*
	1	1	1	1 284 *[78.4]*
	2	2	2	1 401 *[85.5]*

V1

Flanged valve	
Standard without block	0

D3

	Connection type
1	HP: ISO 6162 (Brides SAE flanges) DN 19 BP: ISO 9974-1 (metric + spot face ports)
3	HP: ISO 6162 (Brides SAE flanges) DN 19 BP: ISO 1179-1 (BSPP + spot face ports)
7	HP: ISO 6162 (Brides SAE flanges) DN 19 BP: ISO 11 926-1 (SAE J514 with O-ring seal)
K*	HP: ISO 9974-1 (BSPP + spot face ports) BP: ISO 1179-1 (BSPP + spot face ports)
A	ISO 11 926-1 (SAE J514 with O-ring seal)

* BSP1 ports only available with 1C cover (D1 = 1)

D1

Valving type		
1-displacement valving		1
2-displacement valving	CW&CCW	A
2-displacement valving with boosted brake	CW	D
	CCW	G
3-displacement valving (6/4/2)	CW	L
	CCW	M

*CW- Clockwise, CCW-Counterclockwise

D2

Valving cover	Without chasis fixation	Fixation by two ears
Standard	1	2
With integrated flushing	4	5

CODE

Bearing support

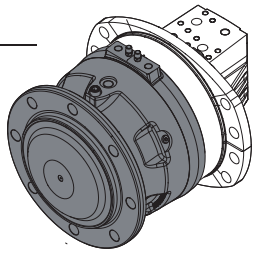

P				S					
1	2	3	4	1	2	3	4	5	6
				Y					

P1

Front unit					
Fixation by ears	On the valving cover	1	R	U	W
	On the bearing support	2	S	V	Y
		Without brake	With P17™ brake	With S17™ single control line	With S17™ double control line

P2

Bearing support		
Bearing support with flange	10 x Ø22 x 1,5 on Ø225 (for studs lenght of 49 mm)	6
	8 x Ø22 x 1,5 on Ø275 (for studs lenght of 70 mm)	7*
	8 x Ø22 x 1,5 on Ø275 (for studs lenght of 70 mm)	9
Bearing support for shaft	Standard	A

* available only for P17™ and S17™ bearing support

P3

Shaft type	
Without shaft	0
Flange	
Without studs	1
With studs + lug nuts	2
With studs	3*
Threaded holes (metric)	4
Male shaft	
NF E22-141 splines	1
DIN 5480 splines	5

* standard configuration for S17™ and P17™

S2-S6

	Options
0	Without option
1	Fluorinated elastomer seals compatible with C and D fluids
2	Installed speed sensor
6	Reduced setting load of bearings
9	Chassis mounting on cam ring side
B	Drain on the bearing support
C	Mechanical seal (for hostile environment)
D	Special paint or no paint
E	Reinforced sealing (for free-wheeling by pressure)
F	Special mountings
G	Special wheel rim mounting
J	Surface heat treatment of the shaft
K	Surface heat treatment on external splines
N	Bleed screw on the bearing support
P	Name plate specific to the customer
U	Boosted brake™

S1

	Standard
Y	Predisposition for speed sensor
	Case flushing (additional drain port on valving system)
	High efficiency
	High speed/Low pressure drop (butterfly valving)

P4

	Orientation
0	α= 0° (standard for non-brake version)
1	α= 60°
2	α= 120°
3	α= 180°
4	α= -60°
5	α= -120°

Look at page 37 for more info about motor orientation.

MODUL

Torque module + **Valving system**

One hydrotorque:

MHP11

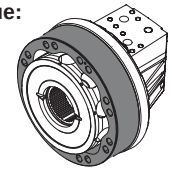

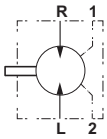

1C

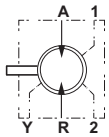

2C

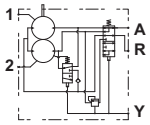

2C Boosted brake™

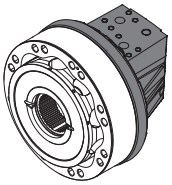

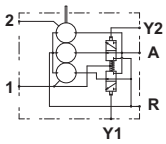

3C

ARITY

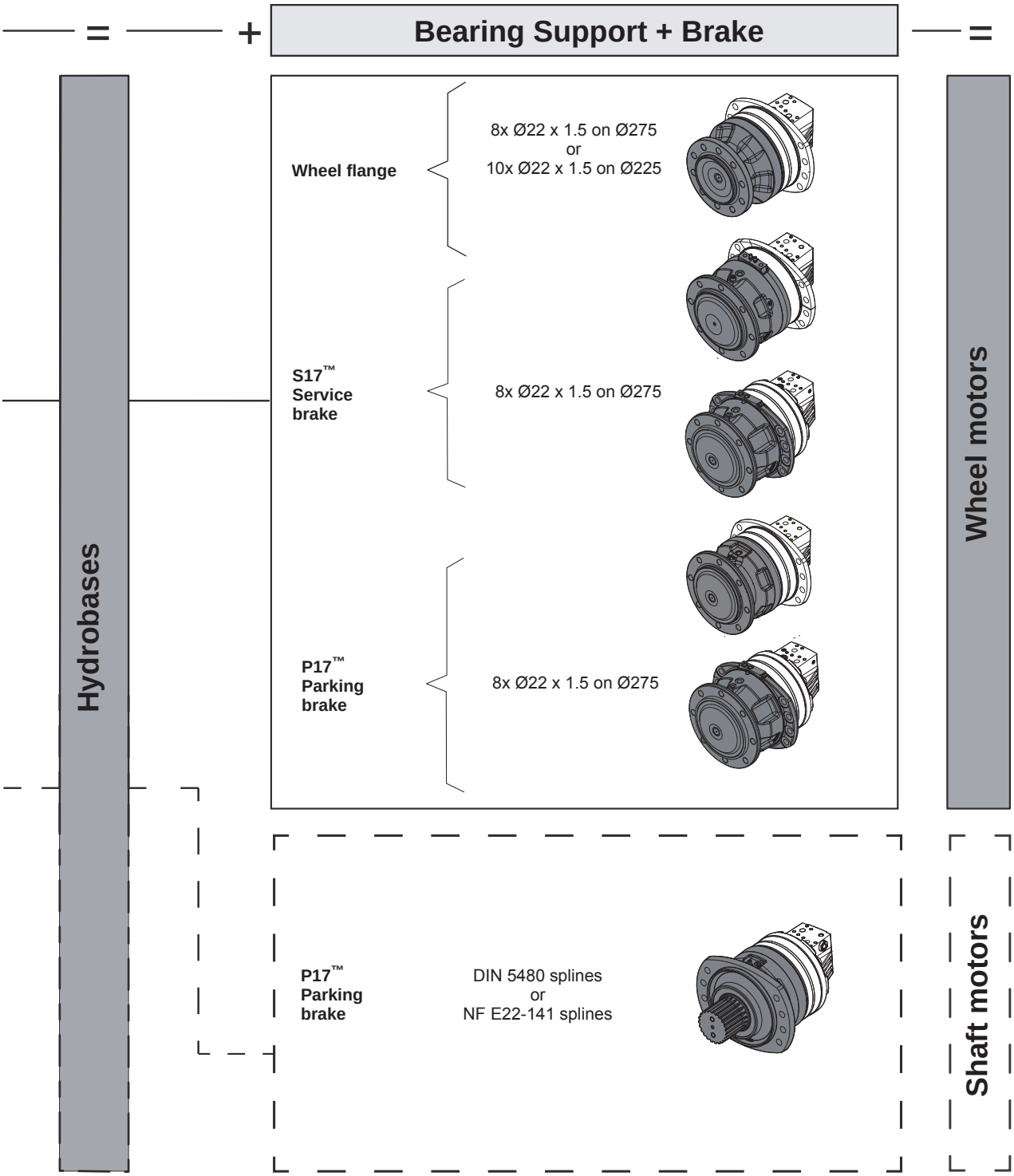
=
+
Bearing Support + Brake
=
Hydrobases
Wheel flange
8x Ø22 x 1.5 on Ø275
or
10x Ø22 x 1.5 on Ø225
S17™
Service
brake
8x Ø22 x 1.5 on Ø275
P17™
Parking
brake
8x Ø22 x 1.5 on Ø275
Wheel motors
P17™
Parking
brake
DIN 5480 splines
or
NF E22-141 splines
Shaft motors

Methodology :
This document is intended for manufacturers of machines that incorporate Poclain Hydraulics products. It describes the technical characteristics of Poclain Hydraulics products and specifies installation conditions that will ensure optimum operation.
This document includes important comments concerning safety. They are indicated in the following way:

	Safety comment.

This document also includes essential operating instructions for the product and general information. These are indicated in the following way:

	Essential instructions.
	General information .
	Information on the model number.Information on the model code.
	Weight of component without oil.
	Volume of oil.
	Units.
	Tightening torque.
	Screws.
	Information intended for Poclain-Hydraulics personnel.

The views in this document are created using metric standards.
The dimensional data is given in mm and in inches (inches are between brackets and italic)

WHEEL MOTOR

Dimensions

	C	D	V	P	S
	1 2 3	1 2 3	1	1 2 3 4	1 2 3 4 5 6
M H P 1 1				1 6 1 0	Y

98 kg *[216 lb]*

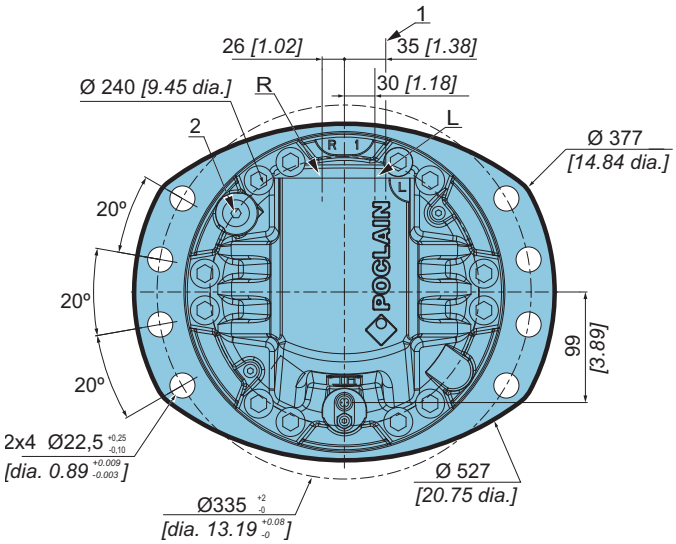

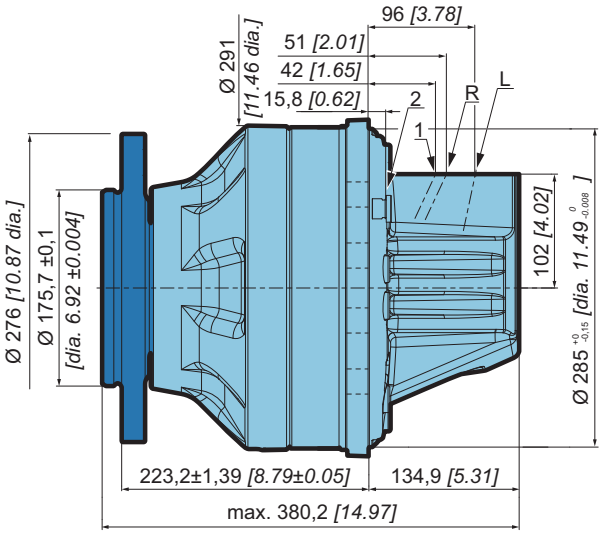

See page 36 for detailed info about hydraulic connections.

Support types

	C	D	V	P	S
	1 2 3	1 2 3	1	1 2 3 4	1 2 3 4 5 6
M H P 1 1					Y

C	A mm [in]	B mm [in]	C mm [in]	D mm [in]	E mm [in]	N mm [in]	Wheel rim mountings	L mm [in]
1 6 1 0 (1 2 3 4 P)	Ø 175,7 [6,92 dia.]	Ø 225 [8,86 dia.]	Ø 276 [10,87 dia.]	223,2 [8,79]	Ø 291 [11,46 dia.]	Ø 22 [0,87 dia.]	10 x M20x1.5	21 [0,83]
1 9 1 0 (1 2 3 4 P)	Ø 220,7 [8,69 dia.]	Ø 275 [10,83 dia.]	Ø 318 [12,52 dia.]	219,6 [8,65]	Ø 291 [11,46 dia.]	Ø 22 [0,87 dia.]	8 x M20x1.5	19 [0,75]

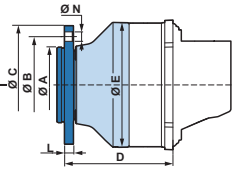

Studs

		P mm [in]	C min. mm [in]	C max. mm [in]	D mm [in]	Class
Various studs	M20 x 1.5	70 [2,76]	5 [0,20]	26 [1,02]	25,0 [0,98]	12,9
Screws	M20 x 1.5	-	-	-	23,0 [0,91]	10,9

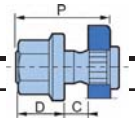

See generic installation motors N°801478197L.

Load curves

Permissible radial loads

Test conditions :

Static : 0 tr/min *[0 RPM]* 0 bar *[0 PSI]*

Dynamic : 0 tr/min *[0 RPM]*, code 0 displacement, without axial load at max. torque

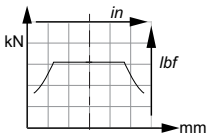

Service life of bearings

Test conditions :

L : Millions B10 revolutions at 150 bars (average pressure), with 25 cSt fluid, code 0 displacement, without axial load.

1	6	1	0
1	2	3	4
P			

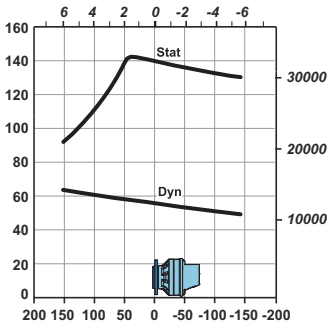

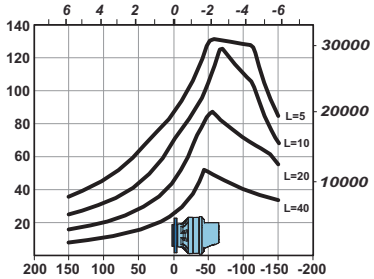

1	9	1	0
1	2	3	4
P			

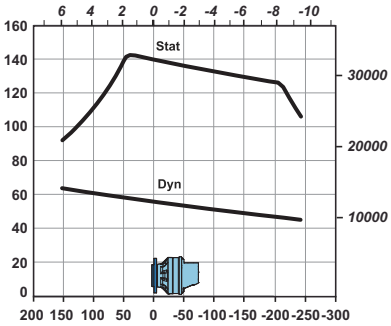

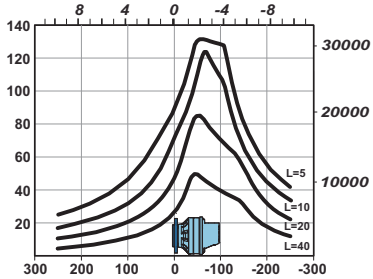

The service life of the components is influenced by the pressure.You must check that the combination of forces applied (Axial load / Radial load) is compatible with the permissible loads for the components, and that the resulting service lives of these components complies with the application's specifications. For an accurate calculation, consult your Poclain Hydraulics application engineer.

Warn the end user in the user documentation to perform an inspection of the shaft after any abnormal shock at wheel.

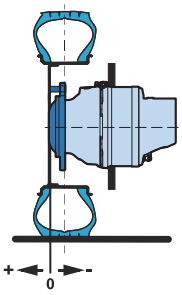

WHEEL MOTOR WITH SERVICE BRAKE

Dimensions

	C	D	V	P	S
	1 2 3	1 2 3	1	1 2 3 4	1 2 3 4 5 6
M H P 1 1				U 7 1 0 / W 7 1 0	Y

132 kg *[291 lb]*

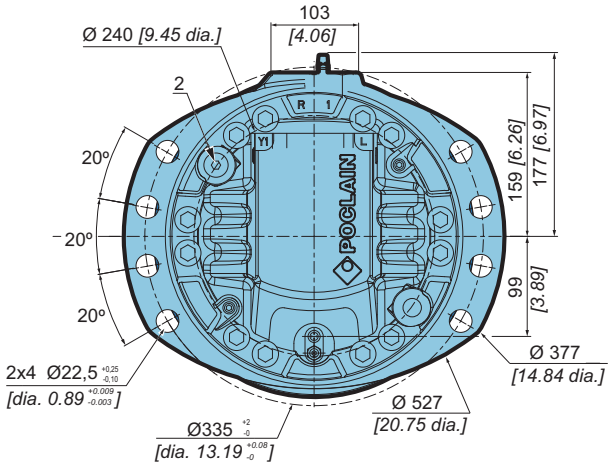

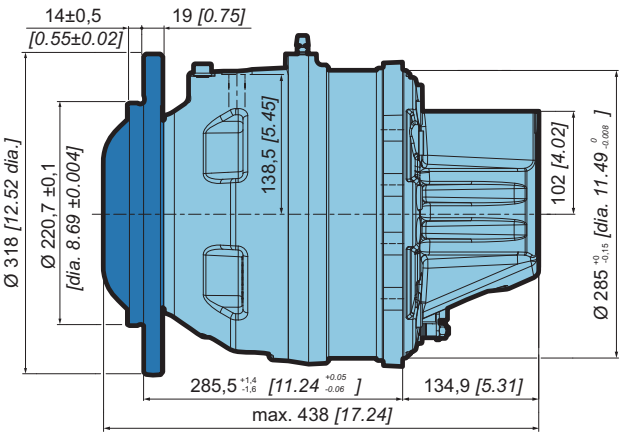

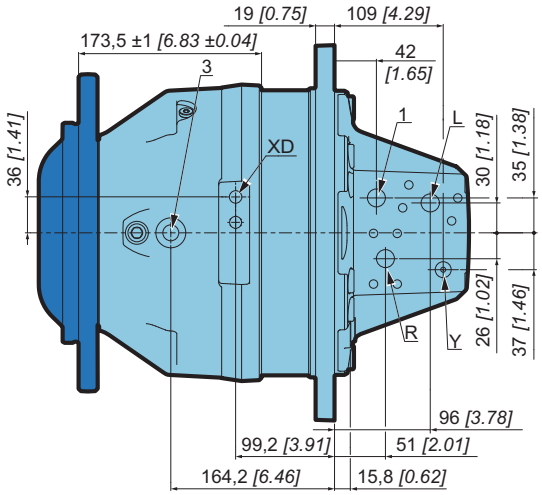

See page 36 for detailed info about hydraulic connections.

Dimensions

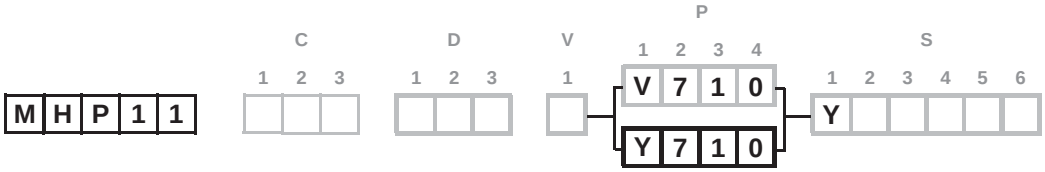

132 kg *[291 lb]*

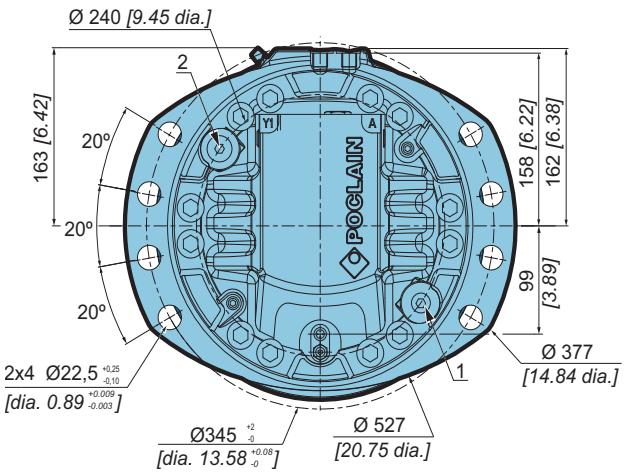

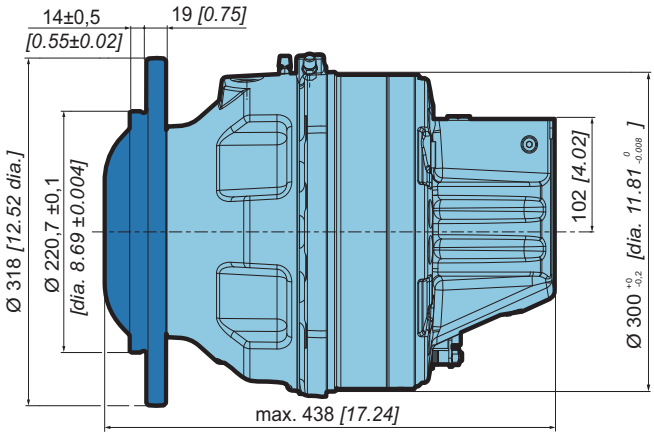

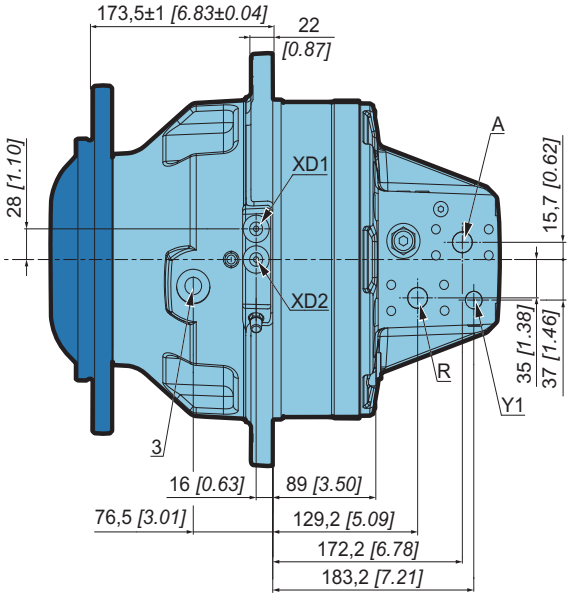

See page 36 for detailed info about hydraulic connections.

Support types

					C			D			V	P				S					
					1	2	3	1	2	3	1	1	2	3	4	1	2	3	4	5	6
M	H	P	1	1												Y					

C	A mm [in]	B mm [in]	C mm [in]	D mm [in]	E mm [in]	N mm [in]	Wheel rim mountings	L mm [in]
U 7 1 0 W 7 1 0 1 2 3 4 P	Ø 220,7 [8,69 dia.]	Ø 275 [10,83 dia.]	Ø 318 [12,52 dia.]	256,7 [10,11]	Ø 285 [11,22 dia.]	Ø 22 [0,87 dia.]	8 x M20x1.5	19 [0,75]
V 7 1 0 Y 7 1 0 1 2 3 4 P	Ø 220,7 [8,69 dia.]	Ø 275 [10,83 dia.]	Ø 318 [12,52 dia.]	173,5 [6,83]	Ø 300 [11,81 dia.]	Ø 22 [0,87 dia.]	8 x M20x1.5	19 [0,75]

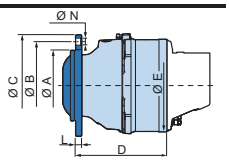

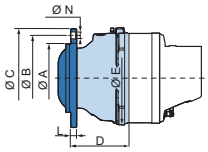

Also see "Brake" section (thumbnail opposite).

Also see "Brake" section (thumbnail opposite).

Studs

		P mm [in]	C min. mm [in]	C max. mm [in]	D mm [in]	Class
Various studs	M20 x 1.5	70 [2,76]	5 [0,20]	26 [1,02]	25,0 [0,98]	12,9
Screws	M20 x 1.5	-	-	-	23,0 [0,91]	10,9

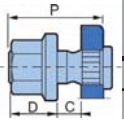

See generic installation motors N°801478197L.

Load curves

Permissible radial loads

Test conditions :

Static : 0 tr/min *[0 RPM]* 0 bar *[0 PSI]*

Dynamic : 0 tr/min *[0 RPM]*, code 0 displacement, without axial load at max. torque

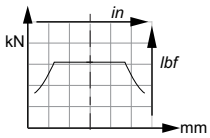

Service life of bearings

Test conditions :

L : Millions B10 revolutions at 150 bars (average pressure), with 25 cSt fluid, code 0 displacement, without axial load.

U	7	1	0
W	7	1	0
1	2	3	4

P

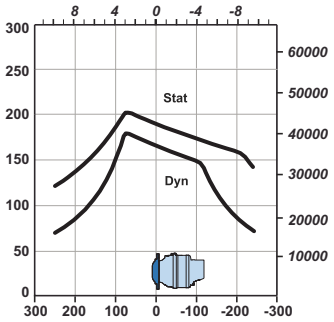

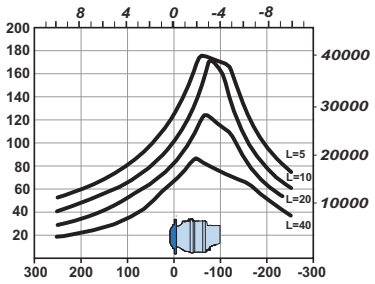

V	7	1	0
Y	7	1	0
1	2	3	4

P

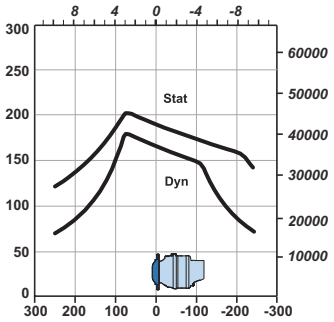

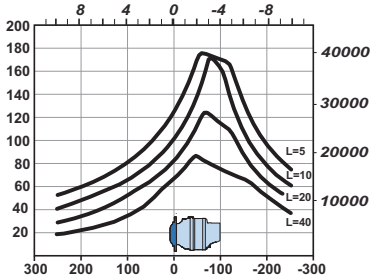

The service life of the components is influenced by the pressure.You must check that the combination of forces applied (Axial load / Radial load) is compatible with the permissible loads for the components, and that the resulting service lives of these components complies with the application's specifications. For an accurate calculation, consult your Poclain Hydraulics application engineer.

Warn the end user in the user documentation to perform an inspection of the shaft after any abnormal shock at wheel.

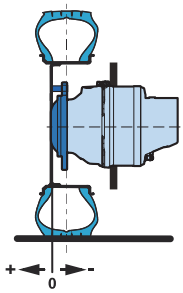

WHEEL MOTOR WITH PARKING BRAKE

Dimensions

	C	D	V	P	S
	1 2 3	1 2 3	1	1 2 3 4	1 2 3 4 5 6
M H P 1 1				R 7 1 0	Y

132 kg *[291 lb]*

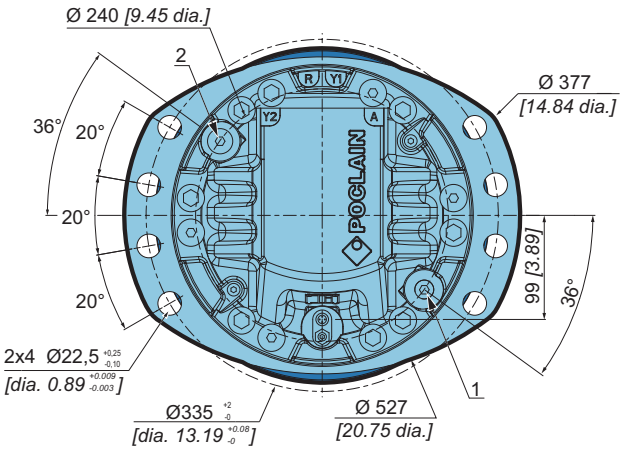

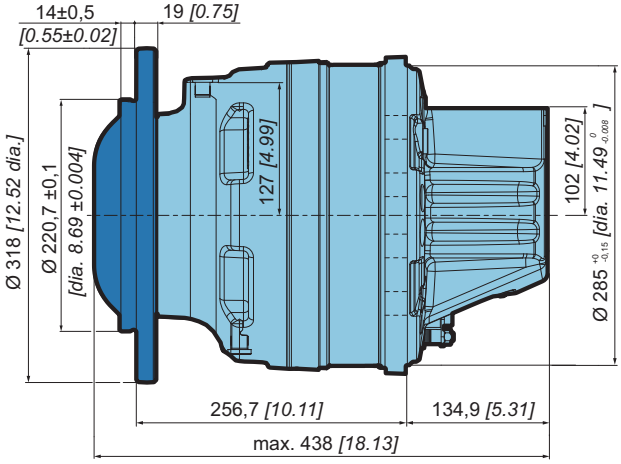

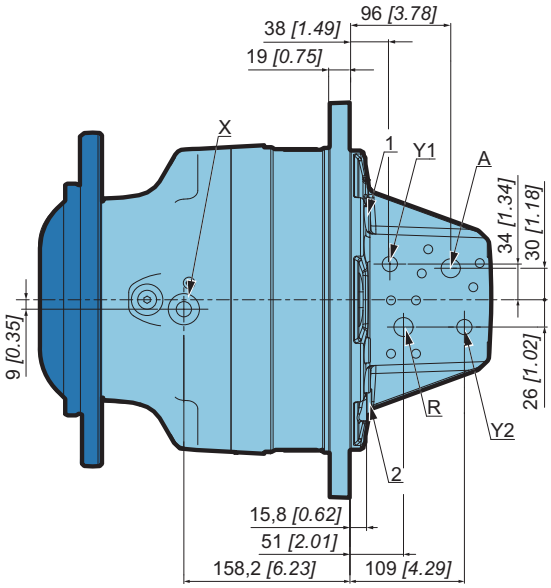

See page 36 for detailed info about hydraulic connections.

Dimensions

	C	D	V	P	S
	1 2 3	1 2 3	1	1 2 3 4	1 2 3 4 5 6
M H P 1 1				S 7 1 0	Y

132 kg *[291 lb]*

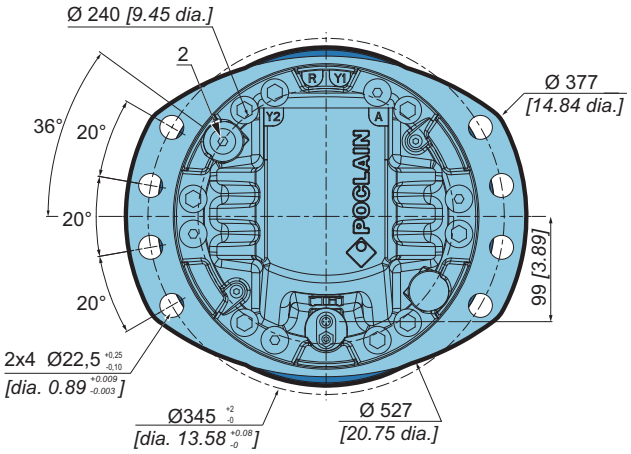

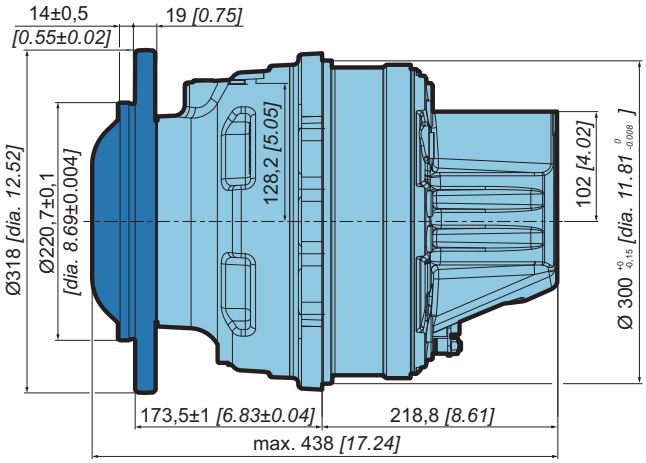

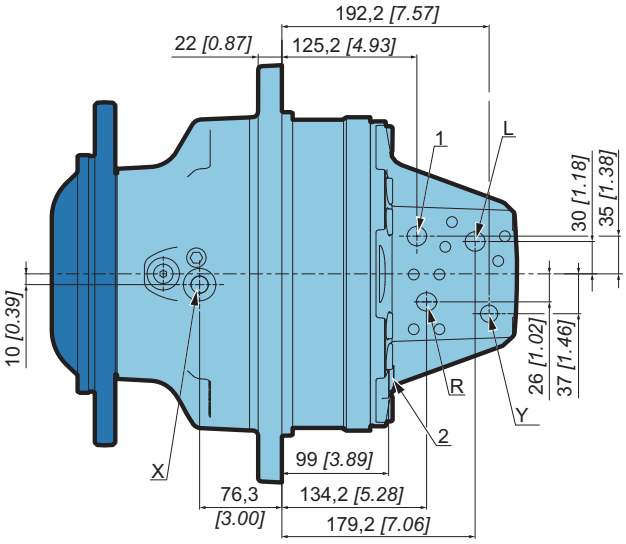

See page 36 for detailed info about hydraulic connections.

Support types

	C	D	V	P	S
	1 2 3	1 2 3	1	1 2 3 4	1 2 3 4 5 6
M H P 1 1					Y

C	A mm [in]	B mm [in]	C mm [in]	D mm [in]	E mm [in]	N mm [in]	Wheel rim mountings	L mm [in]	
R 7 1 0 (1 2 3 4 / P)	Ø 220,7 [8,69 dia.]	Ø 275 [10,83 dia.]	Ø 318 [12,52 dia.]	285,5 [11,24]	Ø 285 [11,22 dia.]	Ø 22 [0,87 dia.]	8 x M20x1.5	19 [0,75]	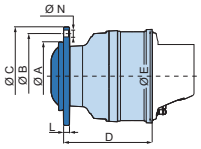
	Also see "Brake" section (thumbnail opposite).								
S 7 1 0 (1 2 3 4 / P)	Ø 220,7 [8,69 dia.]	Ø 275 [10,83 dia.]	Ø 318 [12,52 dia.]	173,5 [6,83]	Ø 300 [11,81 dia.]	Ø 22 [0,87 dia.]	8 x M20x1.5	19 [0,75]	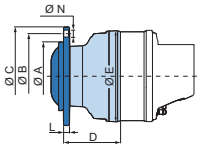
	Also see "Brake" section (thumbnail opposite).								

Studs

		P mm [in]	C min. mm [in]	C max. mm [in]	D mm [in]		Class
Various studs	M20 x 1.5	70 [2,76]	5 [0,20]	26 [1,02]	25,0	[0,98]	12,9
Screws	M20 x 1.5	-	-	-	23,0	[0,91]	10,9

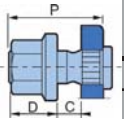

See generic installation motors N°801478197L.

Load curves

Permissible radial loads

Test conditions :

Static : 0 tr/min *[0 RPM]* 0 bar *[0 PSI]*

Dynamic : 0 tr/min *[0 RPM]*, code 0 displacement, without axial load at max. torque

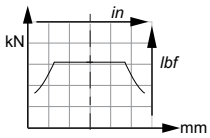

Service life of bearings

Test conditions :

L : Millions B10 revolutions at 150 bars (average pressure), with 25 cSt fluid, code 0 displacement, without axial load.

R 7 1 0
1 2 3 4
P

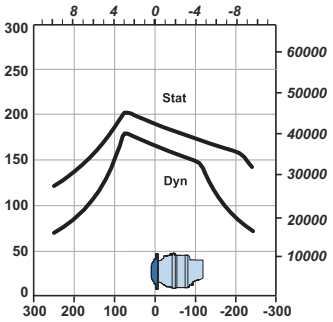

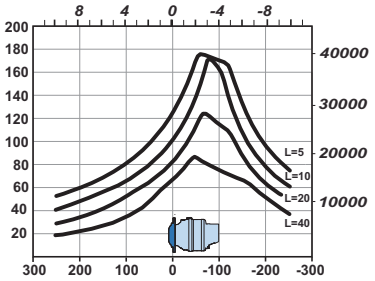

S 7 1 0
1 2 3 4
P

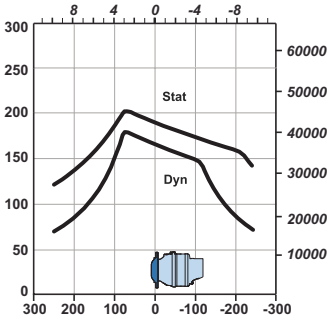

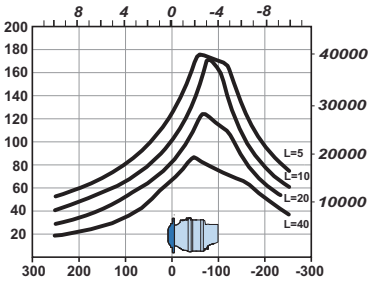

The service life of the components is influenced by the pressure.You must check that the combination of forces applied (Axial load / Radial load) is compatible with the permissible loads for the components, and that the resulting service lives of these components complies with the application's specifications. For an accurate calculation, consult your Poclain Hydraulics application engineer.

Warn the end user in the user documentation to perform an inspection of the shaft after any abnormal shock at wheel.

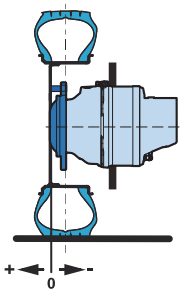

SHAFT MOTOR

Dimensions

	C	D	V	P	S
	1 2 3	1 2 3	1	1 2 3 4	1 2 3 4 5 6
M H P 1 1				2 A 1 0 / 2 A 5 0	Y

96 kg *[212 lb]*

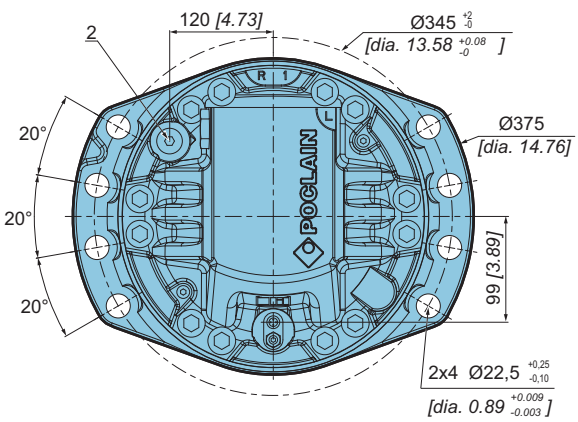

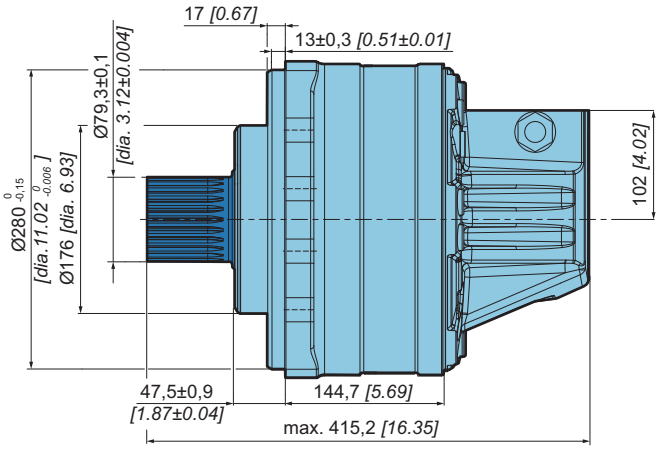

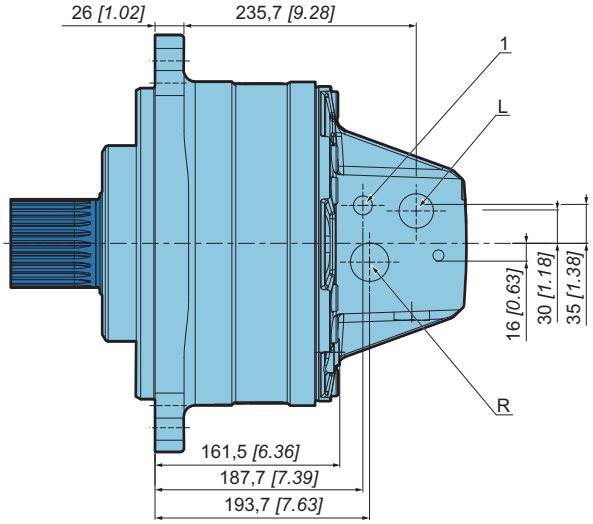

See page 36 for detailed info about hydraulic connections.

Support types

	C	D	V	P	S
	1 2 3	1 2 3	1	1 2 3 4	1 2 3 4 5 6
M H P 1 3					
M H P 1 7					Y

C		A mm *[in]*	B mm *[in]*	C mm *[in]*	D mm *[in]*	E mm *[in]*	F mm *[in]*
2 A 1 0 (1 2 3 4, P)	**NF E22-141** splines Nominal Ø 75 *[2,95]* Module 2,5 Z 25	14 *[0,55]*	R 3 *[R 0,12]*	35 *[1,38]*	2 X M10	23 *[0,91]*	80 *[3,15]*
2 A 5 0 (1 2 3 4, P)	**DIN 5480** splines Nominal Ø 80 *[3,15]* Module 3 Z 25	14 *[0,55]*	R 3 *[R 0,12]*	35 *[1,38]*	2 X M10	23 *[0,91]*	80 *[3,15]*

Also see "Brake" section (thumbnail opposite).

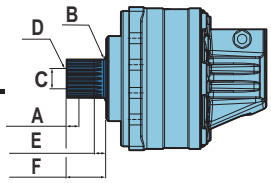

Also see 'Valving systems and hydrobases' section (thumbnail opposite).

Splined coupling

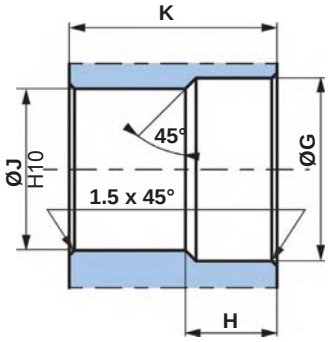

N : Nominal Ø.
Mo : Module.
Z : Number of teeth.

Standard DIN 5480
Pressure angle 30°.
Centering on flanks.
Slide fit (7H quality).

Standard NF E22-141
Pressure angle 20°.
Centering on flanks.
Slide fit (7H quality).

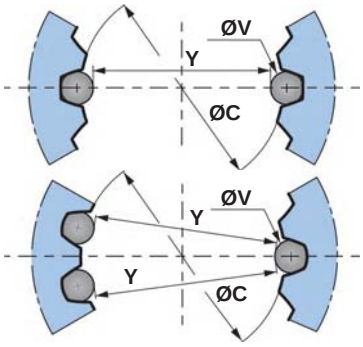

C	Ø G	H	Ø J	K	N	Mo	Z	Offset	Ø C (H10)	Ø V	Y	Tolerance µm *[µin]*
2 A 1 0 (1 2 3 4, P)	76 *[2,99]*	25 *[0,98]*	70 *[2,76]*	69 *[2,72]*	75 *[2,95]*	2,5	28	2 *[0,08]*	70 *[2,76]*	5 *[0,20]*	65,169 *[2,57]*	+ 103 / 0 *[+4.055 / 0]*
2 A 5 0 (1 2 3 4, P)	81,5 *[3,21]*	25 *[0,98]*	74 *[2,91]*	79 *[3,11]*	80 *[3,15]*	3	25	0,85 *[0,0335]*	74 *[2,91]*	5,25 *[0,21]*	68,957 *[2,71]*	+ 71 / 0 *[+2.795 / 0]*

General tolerances: ± 0.25 *[±0.0098]*.
Material: Ex: 42CrMo4.
Hardening treatment to obtain R = 800 to 900 N/mm² *[R = 116 030 to 130 533 PSI]*.

Load curves

Permissible radial loads

Test conditions :

Static : 0 tr/min *[0 RPM]* 0 bar *[0 PSI]*

Dynamic : 0 tr/min *[0 RPM]*, code 0 displacement, without axial load at max. torque

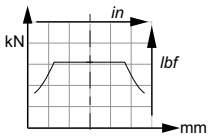

Service life of bearings

Test conditions :

L : Millions B10 revolutions at 150 bars (average pressure), with 25 cSt fluid, code 0 displacement, without axial load.

2 A 1 0
1 2 3 4
P

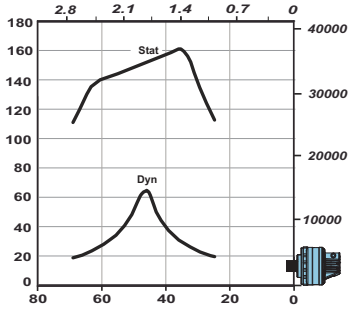

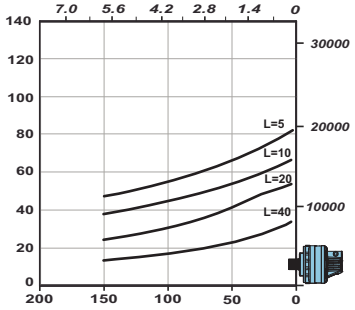

2 A 5 0
1 2 3 4
P

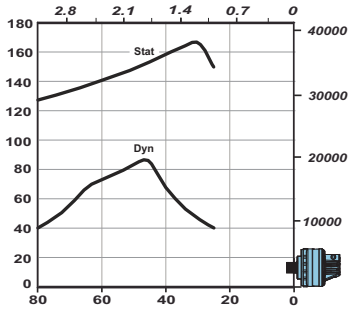

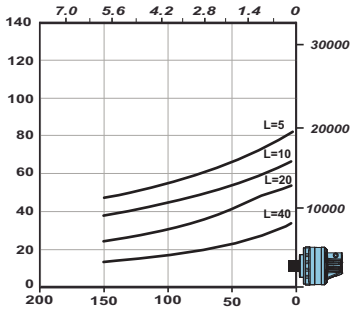

The service life of the components is influenced by the pressure.You must check that the combination of forces applied (Axial load / Radial load) is compatible with the permissible loads for the components, and that the resulting service lives of these components complies with the application's specifications. For an accurate calculation, consult your Poclain Hydraulics application engineer.

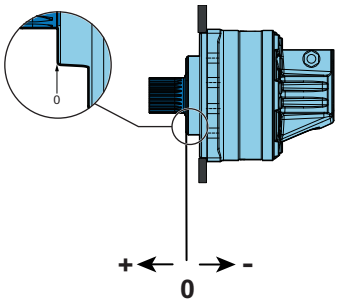

SHAFT MOTOR WITH PARKING BRAKE

Dimensions

	C	D	V	P	S
	1 2 3	1 2 3	1	1 2 3 4	1 2 3 4 5 6
M H P 1 1				S A 5 0	Y

132 kg *[291 lb]*

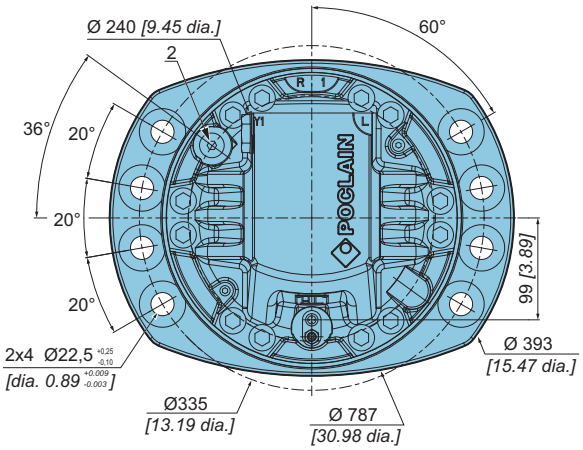

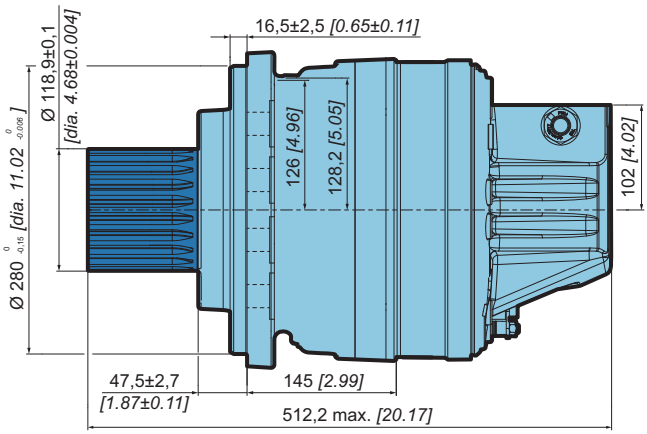

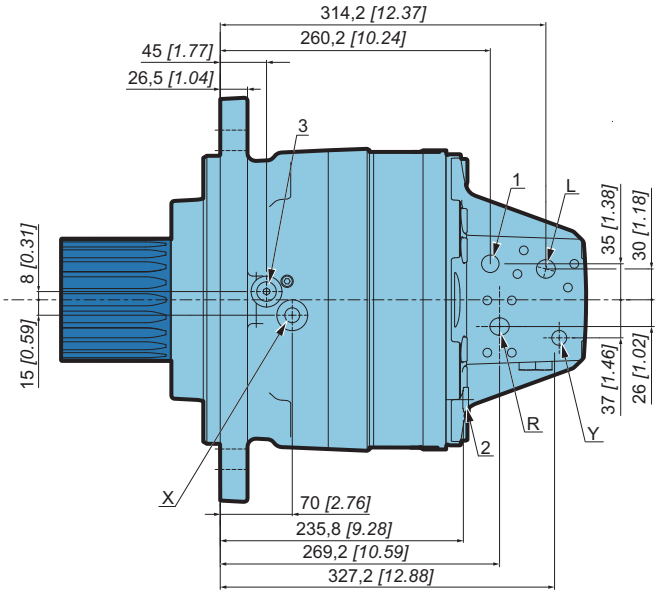

See page 36 for detailed info about hydraulic connections.

Support types

	C	D	V	P	S
	1 2 3	1 2 3	1	1 2 3 4	1 2 3 4 5 6
M H P 1 1					Y

C		A mm *[in]*	B mm *[in]*	C mm *[in]*	D mm *[in]*	E mm *[in]*	F mm *[in]*
S A 5 0 (1 2 3 4; P)	**DIN 5480** splines Nominal Ø 120 *[4,72]* Module 5 Z 22	40 *[1,57]*	R 3 *[R 0,12]*	60 *[2,36]*	2 X M16	28 *[1,10]*	110 *[4,33]*

Also see "Brake" section (thumbnail opposite).

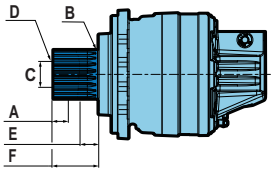

Also see 'Valving systems and hydrobases' section (thumbnail opposite).

Splined coupling

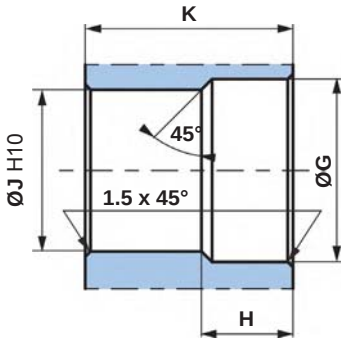

Standard DIN 5480
Pressure angle 30°.
Centering on flanks.
Slide fit (7H quality).

N : Nominal Ø.
Mo : Module.
Z : Number of teeth.

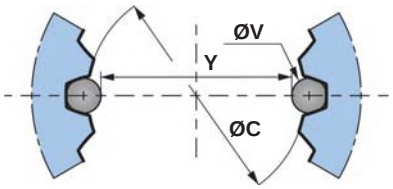

C	Ø G mm *[in]*	H mm *[in]*	Ø J mm *[in]*	K mm *[in]*	N mm *[in]*	Mo	Z	Offset mm *[in]*	ØC (H10) mm *[in]*	Ø V mm *[in]*	Y mm *[in]*	Tolerance µm *[µin]*
S A 5 0 (1 2 3 4; P)	122 *[4,80]*	29 *[1,14]*	110 *[4,33]*	109 *[4,29]*	120 *[4,72]*	5	22	2,25 *[0,09]*	110 *[4,33]*	9 *[0,35]*	101,104 *[3,98]*	+ 87 / 0 *[+3.425 / 0]*

General tolerances: ± 0.25 *[±0.0098]*.
Material: Ex: 42CrMo4.
Hardening treatment to obtain R = 800 to 900 N/mm² *[R = 116 030 to 130 533 PSI]*.

Load curves

Permissible radial loads

Test conditions :

Static : 0 tr/min *[0 RPM]* 0 bar *[0 PSI]*

Dynamic : 0 tr/min *[0 RPM]*, code 0 displacement, without axial load at max. torque

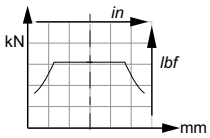

Service life of bearings

Test conditions :

L : Millions B10 revolutions at 150 bars (average pressure), with 25 cSt fluid, code 0 displacement, without axial load.

S	A	5	0
1	2	3	4

P

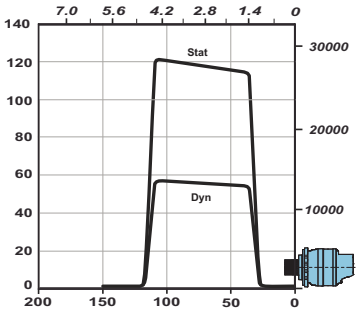

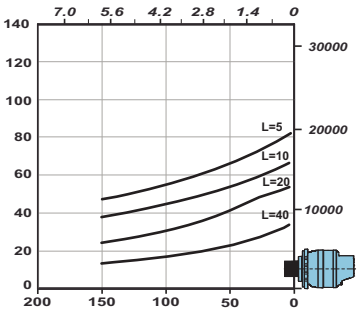

The service life of the components is influenced by the pressure.You must check that the combination of forces applied (Axial load / Radial load) is compatible with the permissible loads for the components, and that the resulting service lives of these components complies with the application's specifications. For an accurate calculation, consult your Poclain Hydraulics application engineer.

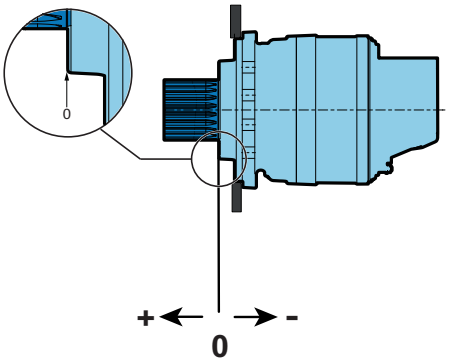

BRAKES

S17™ Service brake

	C	D	V	P	S
	1 2 3	1 2 3	1	1 2 3 4	1 2 3 4 5 6
M H P 1 1					Y

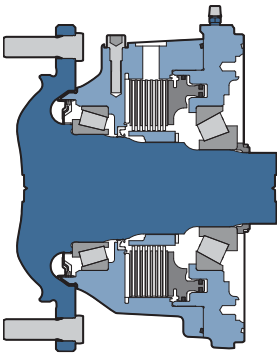

Brake schematic

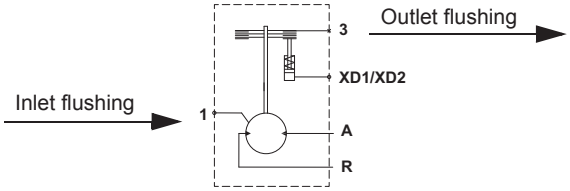

The dynamic brake must be flushed according to the brake schematics (flushing flow always goes of the bearing support).

Brake operation

This multi-disc brake is activated by a braking pressure (dynamic braking). The braking command creates a pressure on the dynamic braking piston, which damps the fixed and free discs, preventing the shaft from turning. Braking torque increases linearly as a function of the piloting pressure.

C

U 7 1 0	V 7 1 0
W 7 1 0	Y 7 1 0

General information	
Max. rotation speed	220 rpm
Max. energy dissipation for 1 braking (maintenance needed)	995 kJ
Dynamic brake information	
Average torque during dynamic braking	22 000 Nm *[16 230 lb.ft]*
Pressure to obtain max. permissible braking	120 bar *[1 740 PSI]*
Piston chamber piloting volume, worn brake	100 cm³ *[6,1 cu.in]*
Service brake max. allowed energy	480 kJ

S17™ wheel flange flushing graph

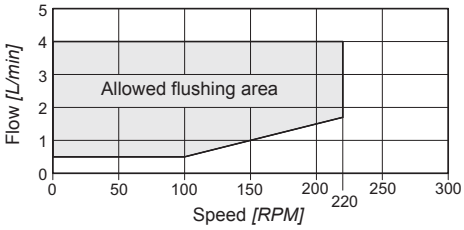

Brake S17™ requires mandatory flushing.

Brake release pressure vented.

The use of certain oils may not offer the characteristics stated above. Consult your Poclain Hydraulics application engineer.

When using the Boosted brake™ option, the S17™ bearing support might not be able to withstand the combination of maximum hydrostatic torque and maximum service brake torque. Please contact your Poclain Hydraulics application engineer for a detailed calculation.

It is essential to connect the brake valve return line directly to the tank. Any counterpressure on the return brake line can cause premature brake wear without any use of the pedal.

Service brake declared data are only valuable for decreasing energy brakings.

P17™ Parking brake

	C	D	V	P	S
	1 2 3	1 2 3	1	1 2 3 4	1 2 3 4 5 6
M H P 1 1					Y

Wheel flange

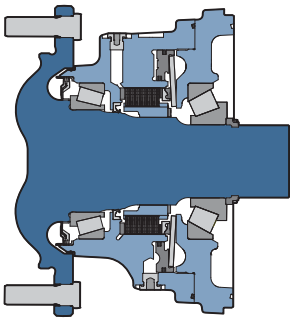

Shaft flange

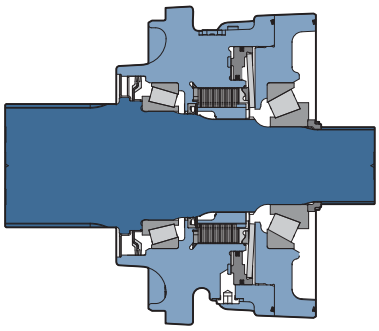

Brake schematic

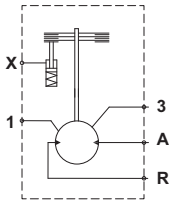

Brake schematic

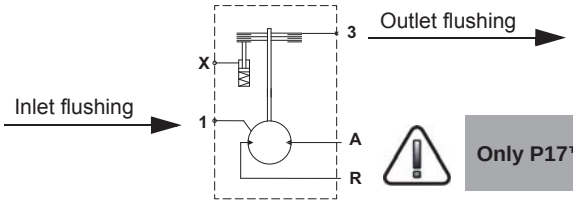

Only P17™ shaft flange can be flushed.

Brake operation
This is a multidisc brake which is activated by a lack of pressure. The spring exerts a force on the piston, which presses on the fixed and mobile discs, and immobilizes the shaft. The braking torque decreases in linear propotion to the brake release pressure.

	R 7 1 0	
C	S 7 1 0	S A 5 0
	Wheel flange	Shaft flange
Max. rotation speed	220 rpm	300 rpm
Max. energy dissipation	225 kJ	
Number of parking brake applications	1 000 000	
Release brake pressure (min/max)	16 *[232]* / 30 *[435]*	
Min. parking brake torque	16 000 Nm *[11 800 lb.ft]*	
Min. static brake torque (after emergency braking)	15 600 Nm *[11 510 lb.ft]*	
Min. dynamic brake torque in case of emergency brake with new brake	14 000 Nm *[10 330 lb.ft]*	

P17™ shaft flange flushing graph

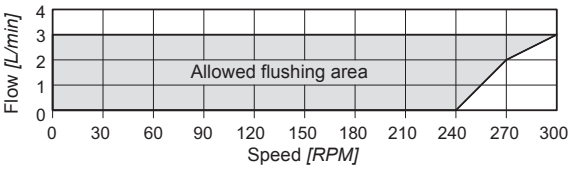

Do not run-in the multidisc brakes.

A functional check of the parking brake must be carried out each time it is used as an auxiliary brake (or emergency brake). For all vehicles capable of speeds over 25 km/h, please contact your Poclain Hydraulics application engineer.

The use of certain oils may not offer the characteristics stated above. Consult your Poclain Hydraulics application engineer.

When using the Boosted brake™ option, the P17™ bearing support might not be able to withstand the combination of maximum hydrostatic torque and maximum service brake torque. Please contact your Poclain Hydraulics application engineer for a detailed calculation.

Boosted brake™

	C	D	V	P	S
	1 2 3	1 2 3	1	1 2 3 4	1 2 3 4 5 6
M H P 1 1					Y U

Distribution type		
2-displacement valving with boosted brake	CW	D
	CCW	G

Why Boosted brake™ function?

Bosted brake™ provides increased hydrostatic braking capabilities. It enables regulation requirements to be met in terms of braking distances, whilst reducing the use of the friction brakes. Boosted brake™ complements the diesel engine´s retardation capacity. It also avoids engine over-speed when braking.
Using the principles of hydrostatic braking through the hydraulic motor´s entire displacement capacity and not just the partial displacement that is active when braking occurs, it converts the machine´s kinetic energy into heat in the oil in the hydrostatic transmission system.
This heat is then evacuated in the cooler.
Boosted brake™ is especially interesting for all machines subject to high and/or repeated deceleration, both on the road and in the field.
It is recommended for machines with diesel engines with a low retardation capacity.

Half of the hydrostatic braking torque is used

Without Boosted brake™

This feature is integrated into the motor

All the hydrostatic braking torque is used

With Boosted brake™

The braking is more efficient and engine is preserved: that is an essential point to ensure the lifetime of the machine.

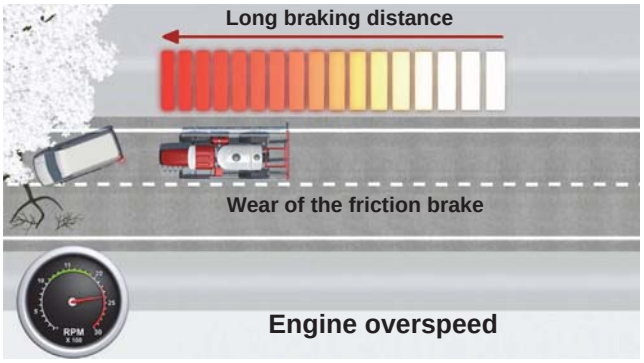

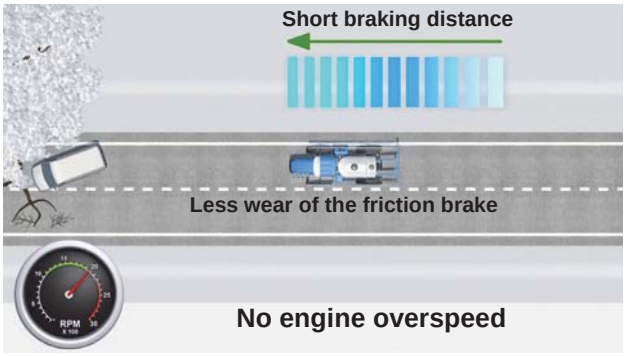

Consult your Poclain Hydraulics application engineer.

INSTALLATION

Customer's chassis and wheel rim mountings

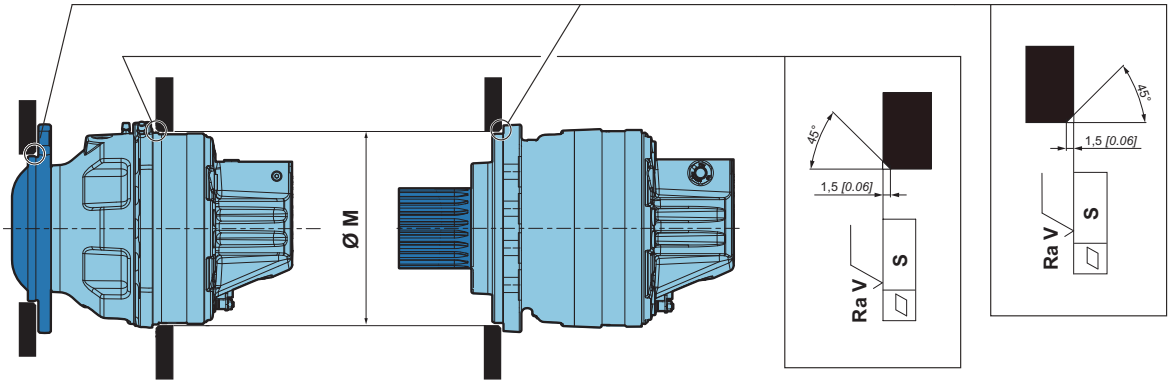

Take care over the immediate environment of the connections.

	ØM (1) mm *[in]*	S mm *[in]*	Ra V µm *[µin]*		Class	*
Wheel motor (1610/1910)	285 *[11,22]*	0,2 *[0.008]*	12,5 *[0.492]*	2 x 4 M22 x 1,5	**10.9**	780 N.m *[585 lb.ft]*
Wheel motor (U710/W710/R710)						
Wheel motor (V710/Y710/S710)	300 *[11,81]*					580 N.m *[428 lb.ft]*
Shaft motor (2A10/2A50/SA50)	280,0 *[11,02]*					

(1) +0,3 *[+0,000]*
+0,2 *[+0,000]*

* Min. values for torque and load to be transmitted

You are strongly advised to use the fluids specified in brochure "Installation guide" N° 801478197L.

To find the connections' tightening torques, see the brochure "Installation guide" N° 801478197L.

For more information see technical catalogue " Installation guide N° 801478197L.

Speed shifting logic

2 displacements motor

	Y1
1st displacement	0
2nd displacement	1

3 displacements motor

	Y1	Y2
1st displacement	1	0
2nd displacement	0	0
3rd displacement	0	1

It´s prohibited to pilot Y1 and Y2 in the same time.

Hydraulic connections

		C			D			V	P				S					
		1	2	3	1	2	3	1	1	2	3	4	1	2	3	4	5	6
M	H	P	1	1									Y					

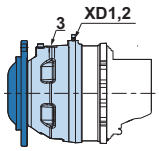

S17™ Service brake

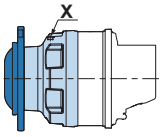

P17™ Parking brake

		Standards	Power supply	Standards	Case drain	2nd, 3rd displace-ment	Control of service brake	Control of service brake	Control of parking brake	Control of parking brake
			R-L		1-2		XD1	XD2	3	X
1st Displacement	1	ISO 6162	SAE 6000PSI 3/4"	ISO 9 974-1	M18x1.5		M14x1.5	M14x1.5	M18x1.5	M16x1.5
	3	ISO 6162	SAE 6000PSI 3/4"	ISO 1179	BSP 3/8		BSP 1/4	BSP 1/4	BSP 3/8	BSP 3/8
	7	ISO 6162	SAE 6000PSI 3/4"	ISO 11 926	7/8"-14 UNF		9/16"-18 UNF	9/16"-18 UNF	3/4"-16 UNF	9/16"-18 UNF
	K	ISO 1179	BSP 1"	ISO 1179	BSP 3/8		BSP 1/4	BSP 1/4	BSP 3/8	BSP 3/8
			R-L		1-2	Y	XD1	XD2	3	X
2nd Displacement	1	ISO 6162	SAE 6000PSI 3/4"	ISO 9 974-1	M18x1.5	M16X1.5	M14x1.5	M14x1.5	M18x1.5	M16x1.5
	3	ISO 6162	SAE 6000PSI 3/4"	ISO 1179	BSP 3/8	BSP 3/8	BSP 1/4	BSP 1/4	BSP 3/8	BSP 3/8
	7	ISO 6162	SAE 6000PSI 3/4"	ISO 11 926	7/8"-14 UNF	3/4"-16 UNF	9/16"-16 UNF	9/16"-18 UNF	3/4"-16 UNF	9/16"-18 UNF
			R-A		1-2	Y1-Y2	XD1	XD2	3	X
3rd Displacement	1	ISO 6162	SAE 6000PSI 3/4"	ISO 9 974-1	M18x1.5	M16x1.5	M14x1.5	M14x1.5	M18x1.5	M16x1.5
	3	ISO 6162	SAE 6000PSI 3/4"	ISO 1179	BSP 3/8	BSP 3/8	BSP 1/4	BSP 1/4	BSP 3/8	BSP 3/8
	7	ISO 6162	SAE 6000PSI 3/4"	ISO 11 926	7/8"-14 UNF	3/4"-16 UNF	9/16"-18 UNF	9/16"-18 UNF	3/4"-16 UNF	9/16"-18 UNF
Max pressure		bar *[PSI]*	450 *[6 527]*		1 *[14.5]*	30 *[435]*	120 *[1 740]*	120 *[1 740]*		30 *[435]*

Orientation

	C	D	V	P	S
	1 2 3	1 2 3	1	1 2 3 4	1 2 3 4 5 6
M H P 1 1					Y

Distribution angular deviation [°]	
0°	0
60°	1
120°	2
180°	3
-60°	4
-120°	5

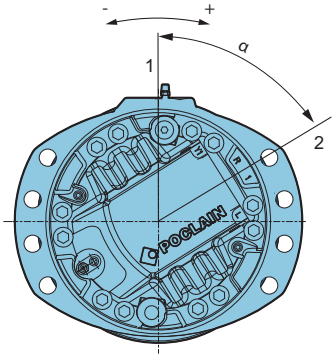

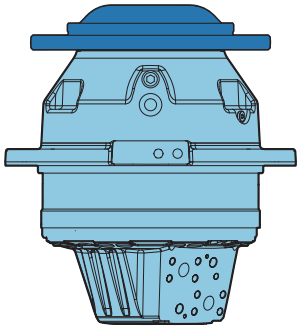

1: Reference axis:
supply orifice of braking bearing support

2: Axis on cover: supply orifices axis

α: Angle between ports on the bearing support (brake) and ports on the cover (power supply)

Motor orientation and balancing during handling

	C	D	V	P	S
	1 2 3	1 2 3	1	1 2 3 4	1 2 3 4 5 6
M H P 1 1					Y

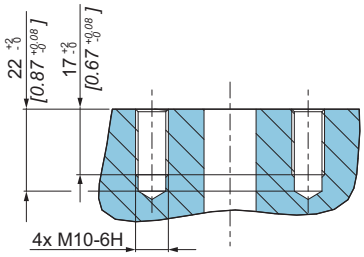

Use R port connections for motor orientation and balancing during handling.

OPTIONS

	C	D	V	P	S
	1 2 3	1 2 3	1	1 2 3 4	1 2 3 4 5 6
M H P 1 1					Y

You can accumulate more than one optional part. Consult your Poclain Hydraulics sales engineer.

Y Standard option

-Predisposition for speed sensor
-Case flushing (additional drain on the valving cover)
-High efficiency (piston with special ring)
-High speed/Low pressure drop (Butterfly valving)

1 Fluorinated elastomer seals

Compatible with C and D fluids.

Consult your Poclain Hydraulics sales engineer.

2 Installed speed sensor

Designation	C
T4 speed sensor installed (without rotation direction)	2

A-A

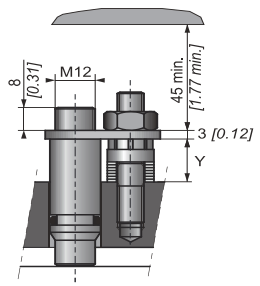

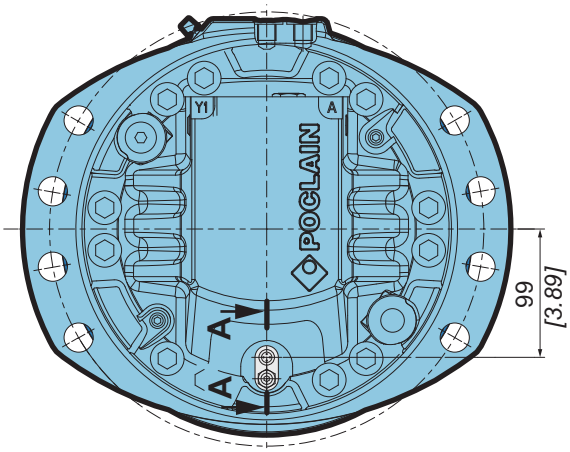

Max. length Y = 21,5 *[0.85]*

Standard number of pulses per revolution = 80

Look at the "Mobile Electronic" N° A01889D technical catalogue for the sensor specifications and its connection.

To install the sensor, see the "Installation guide" brochure No. 801478197L.

6 Reduced preload setting of bearing

Reduction of around 50% from the rated value in the bearings' preload value. Without external loads, increases the lifetime of the bearing support.

For a precise calculation, consult your Poclain Hydraulics application engineer.

9 Chassis mounting on cam ring side

Only available for shaft motors.

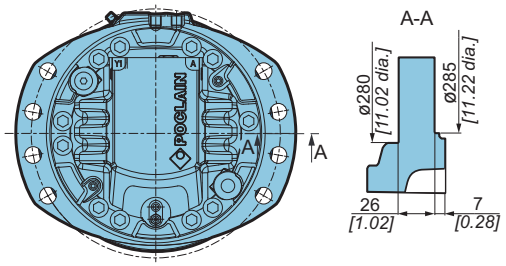

B Drain on the bearing support

Only available for shaft motors.

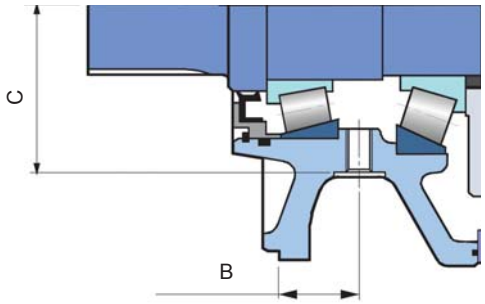

		B	C
		mm *[in]*	mm *[in]*
Shaft motor	**M18x1,5**	*60 [2.36]*	128,2 *[5.05]*

C Mechanical seal

Some environements can be very harmful. The mirror seal gives reinforced motor sealing.

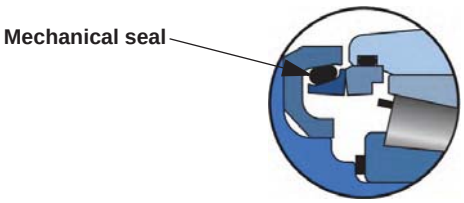

Consult your Poclain Hydraulics sales engineer.

D Special paint or no paint

The motors are delivered with Poclain Hydraulics yellow ochre primer as standard.

Consult your Poclain Hydraulics application engineer for other colors of primer or topcoat.

E Reinforced sealing

For free-wheeling by pressure.

G Special wheel rim mounting

Enables certain combinations different from the standard mountings defined on page 14.

Consult your Poclain Hydraulics application engineer.

J Surface heat treatment of the shaft

Heat treatment on the indicated bearing raius.

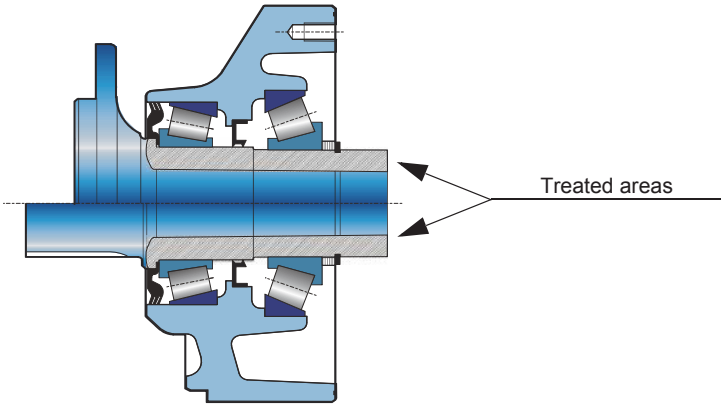

K Surface heat treatment on external splines

N Bleed screw on the bearing support

P Name plate specific to the customer

Your part number can be engraved on the plate.

Consult your Poclain Hydraulics application engineer for other possibilities.

F Special mountings

U Boosted brake™

Consult your Poclain Hydraulics application engineer (see page 33).

POCLAIN Hydraulics

Poclain Hydraulics reserves the right to make any modifications it deems necessary to the products described in this document without prior notification.The information contained in this document must be confirmed by Poclain Hydraulics before any order is submitted.
Illustrations are not binding.
The Poclain Hydraulics brand is the property of Poclain Hydraulics S.A.

15/06/2018
Not available
B46537H
Not available
Not available
Not available
Not available
Not available
Not available

www.poclain-hydraulics.com